E18 SCSI-II D-SUB PCB STRAIGHT

POSITION	A	B	C	D
20F	11.45	27.45	33.60	21.05
26F	15.26	31.26	37.41	24.86
28F	16.53	32.53	38.68	26.13
40F	24.15	40.15	46.30	33.75
50F	30.50	46.50	52.65	40.10
60F	36.85	52.85	59.00	46.45
68F	41.93	57.93	64.80	51.53
80F	49.55	65.55	71.70	59.15
100F	62.25	78.25	84.40	71.85
120F	74.95	90.95	97.10	84.55

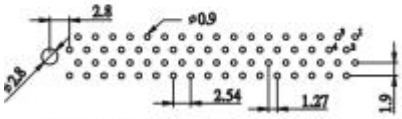

P.C.BOARD LAYOUT FOR
20F,28F,40F,68F,80F,100F,120F
(TYPE C)

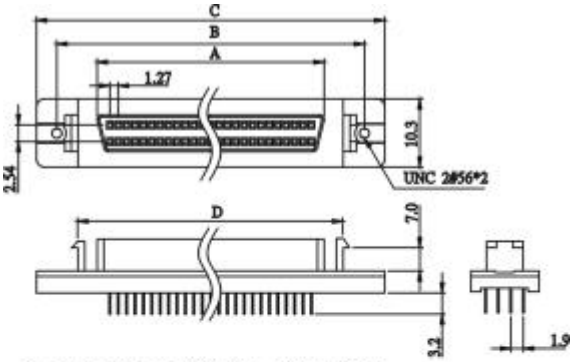

P.C.BOARD LAYOUT PATTERN

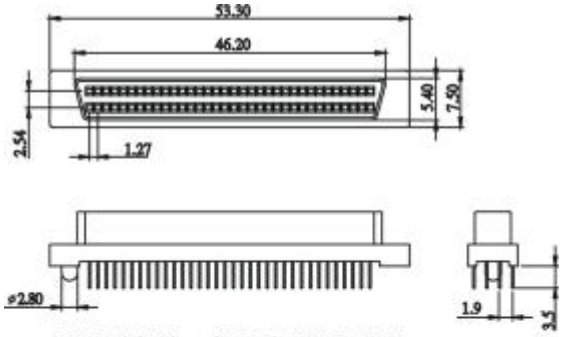

ALL PLASTIC — 68 POSITION ONLY

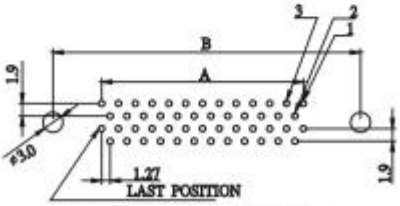

P.C.BOARD LAYOUT FOR
26F,50F (TYPE A)

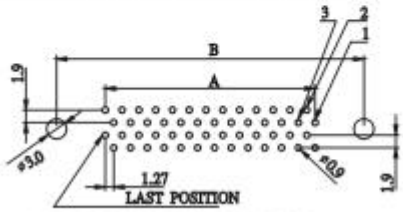

P.C.BOARD LAYOUT FOR
20F,28F,40F,68F,80F,100F,120F
(TYPE B)

HOW TO ORDER:

E18 - 1 - 2 - 3 - 4 - 5 - 6 - 7 - 8

1.NO. OF CONTACT	2.CONTACT TYPE	3.CONTACT PLATING	4.SHELL OPTION
26 28 40 50 68 80 100	F: FEMALE	T: TIN PLATED S: SELECTIVE G: GOLD FLASH A: 5u" INCH GOLD B: 10u" INCH GOLD C: 15u" INCH GOLD D: 30u" INCH GOLD	A: METAL SHELL B: ALL PLASTIC

5.MOUNTING METHOD	6.PARTS OPTION	7.P.C.BOARD LAYOUT	8.INSULATOR COLOR
A: THREAD INSERT 2-56 UNC B: THREAD INSERT 4-40 UNC C: THREAD INSERT M3 D: THREAD INSERT M2.6	A: WITH FRONT LATCH B: WITHOUT FRONT LATCH	A: TYPE A B: TYPE B C: TYPE C	1. BLACK